MIB CONNECTORS & SAFETY SYSTEMS

MIB PRESENTATION

February 2014

MIB PRESENTATION OF CONNECTORS AND SAFETY SYSTEMS

MIB

marine terminal equipment
lng qcdc & ers systems
offshore connectors
high pressure systems
well containment packages
cng offshore connectors
oil & gas export solutions

MIB Italiana S.P.A. / MIB International ltd

- Entered the Oil & Gas Emergency Connector and Safety System business in 1966 with equipment now in-service world-wide.

- Based in Padova, NE Italy with a branch office in Coventry UK.

- Renown leaders in the supply of quality customised as well as standard solutions for all types of marine terminals.

- Pro-active and progressive approach to R&D keeps the company abreast of increasing client demands.

- Provides a full After Sales Service for training, assistance and maintenance.

MIB ITALIANA PLANT, PADUA, ITALY

IN THE BEGINNING

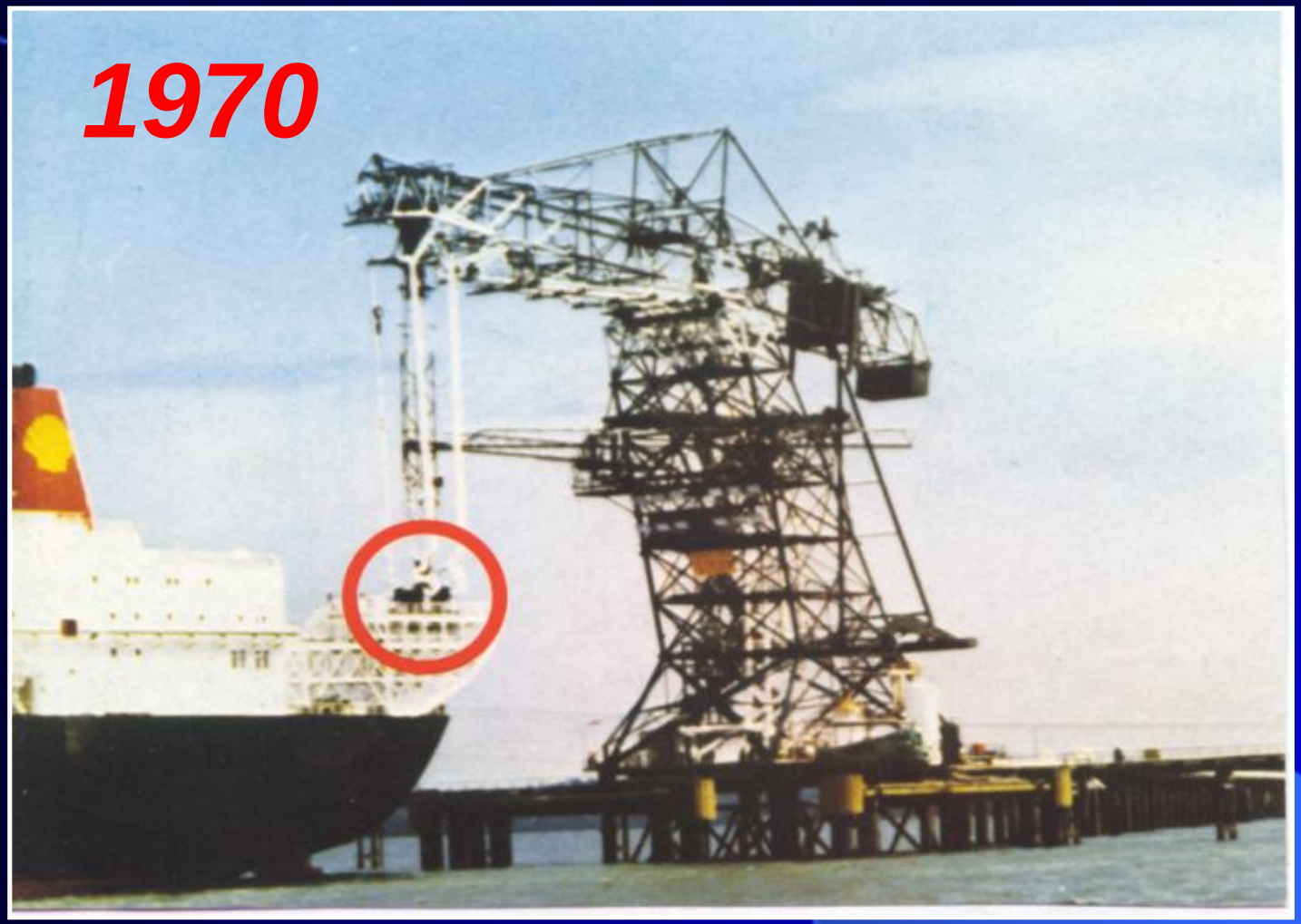

PETROBRAS REGAS TERMINALS

2010

ERS & QCDC

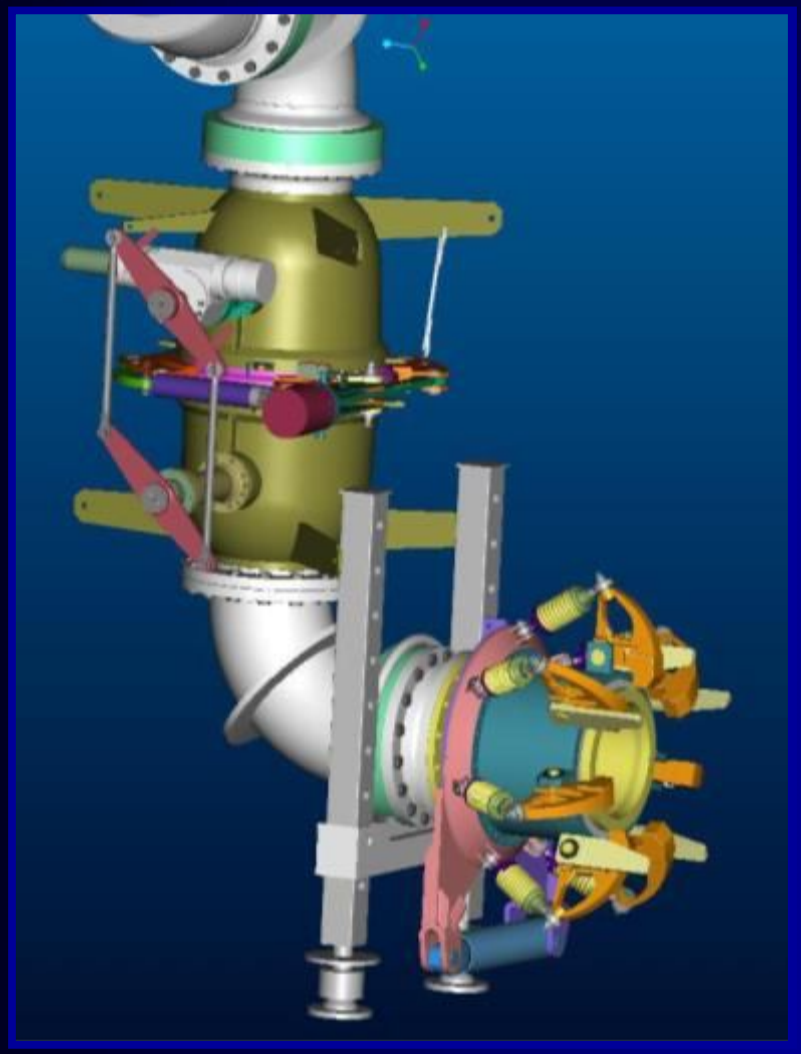

STANDARD ARRANGEMENT OF QCDC & ERS FOR LNG ON A DOCK BASED LOADING ARM.

SYSTEMS FOR THE BRIDGE TRANSFER WILL BE BASED UPON THE SAME PROVEN DESIGNS AND OPERATIONAL CRITERIA

ERS & QCDC

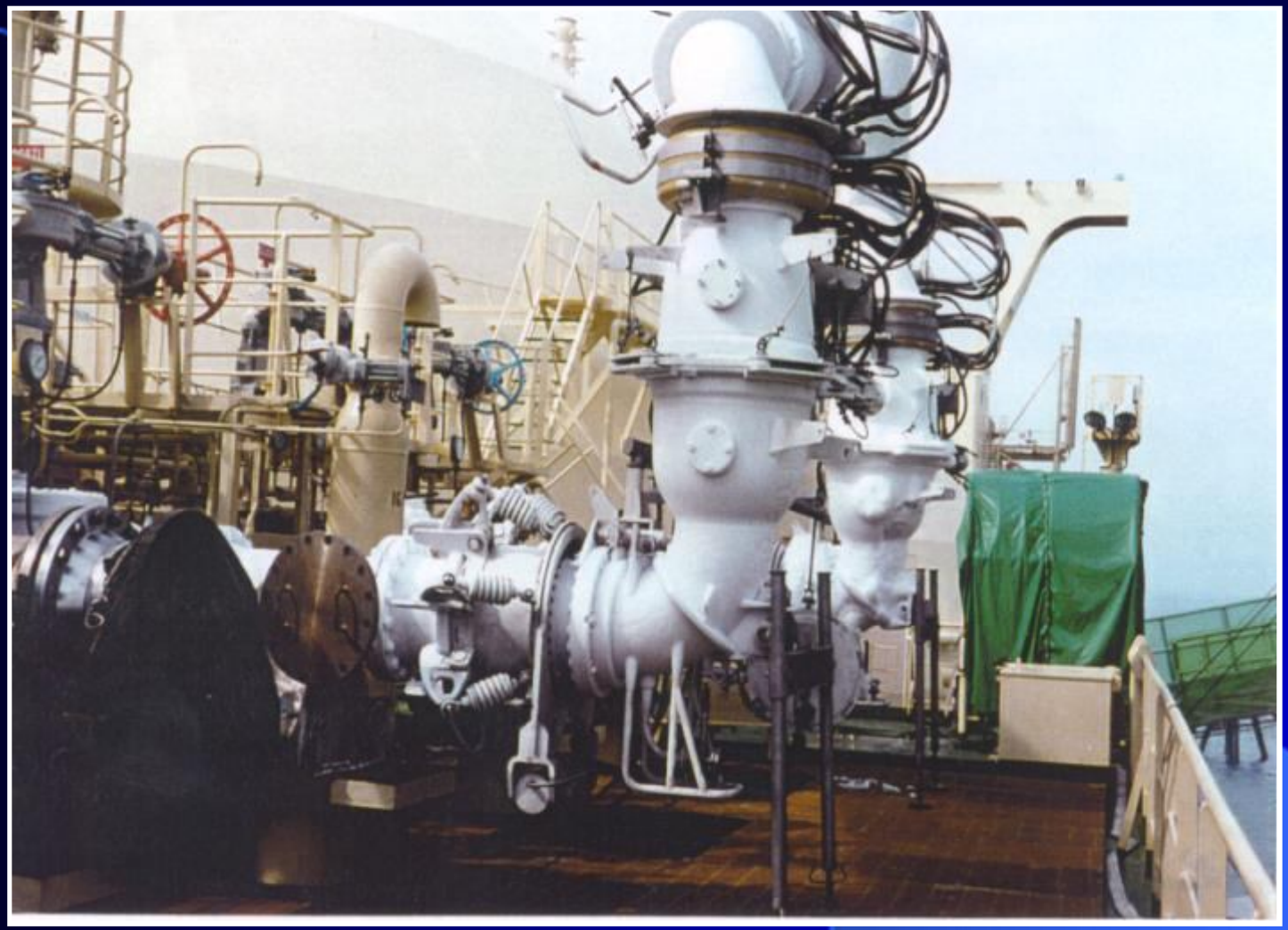

ERS & QCDC

LNG ERS & QCDC

MIB HYDRAULIC QCDC WITH INTEGRAL BALL VALVE

MIB HYDRAULIC QCDC WITH INTEGRAL BALL VALVE

MIB OFFSHORE SOLUTIONS

MIB CUSTOMISED
CONNECTORS AND
SAFETY SYSTEMS FOR
OFFSHORE TERMINALS,
FPSO AND FSO VESSELS

MIB OFFSHORE CONNECTORS & SAFETY SYSTEMS

TURRET & RISER RELEASE SYSTEMS FOR FPSO AND FSO INSTALLATIONS TO PROTECT AGAINST TYPHOONS OR CYCLONES

FLOATING HOSES & MARINE BREAKAWAY COUPLINGS

HIGH AND LOW PRESSURE CONNECTORS AND SAFETY SYSTEMS FOR PRODUCTION RISERS, INJECTION RISERS, TRANSFER LINES, EXPORT HOSES, ETC

RISER and UMBILICAL EMERGENCY RELEASE SYSTEM

MIB OFFSHORE CONNECTORS & SAFETY SYSTEMS

MIB HIGH PRESSURE CONNECTORS & VALVING SYSTEMS SUPPLIED TO THE NAN HAI X1 FPSO ON THE WEIZHOU DEVELOPMENT PROJECT

SINGLE & DOUBLE CARCASS FLOATING OR SUBMERGED HOSES. SPECIAL HOSES FOR EXTREME ENVIRONMENTS OR APPLICATIONS

MIB QCDC SYSTEM FOR EXPORT HOSE PROTECTION UNDERGOING FINAL ACCEPTANCE TESTING IN MIB'S PLANT

MIB HYDRAULIC QCDC/DUAL BALL VALVE

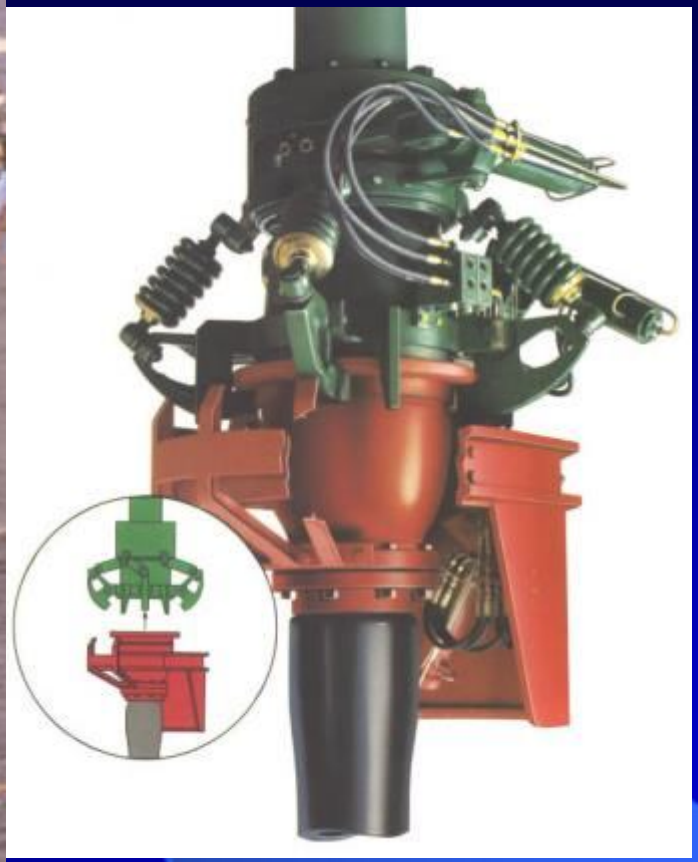

EARLY BOW LOADING SYSTEMS

MIB LNG FLNG SYSTEM

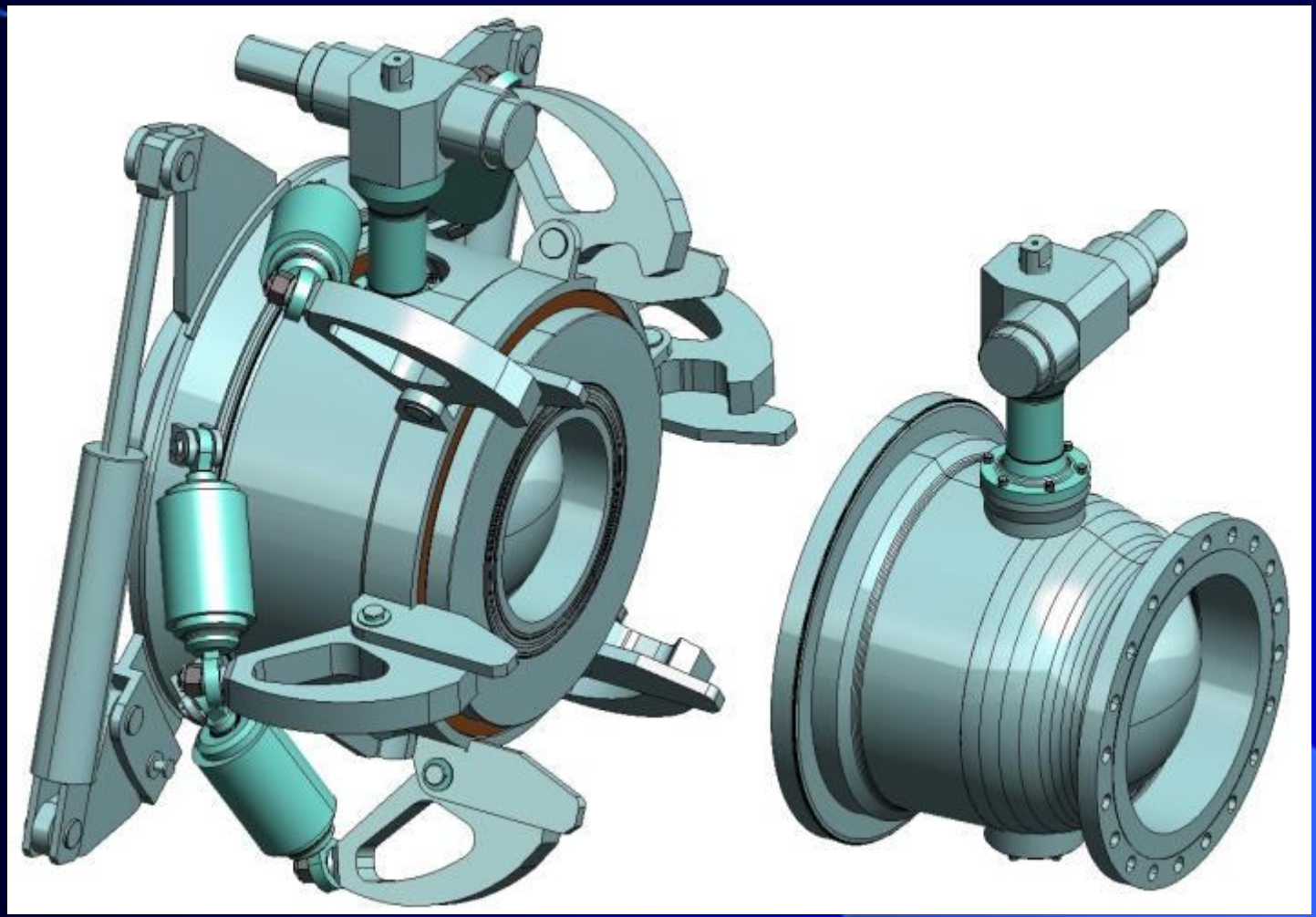

MIB DISCONNECTABLE TURRET CONNECTORS

MIB DISCONNECTABLE TURRET CONNECTORS

MIB MULTIPATH TURRET DISCONNECTION SYSTEMS

VIDEO

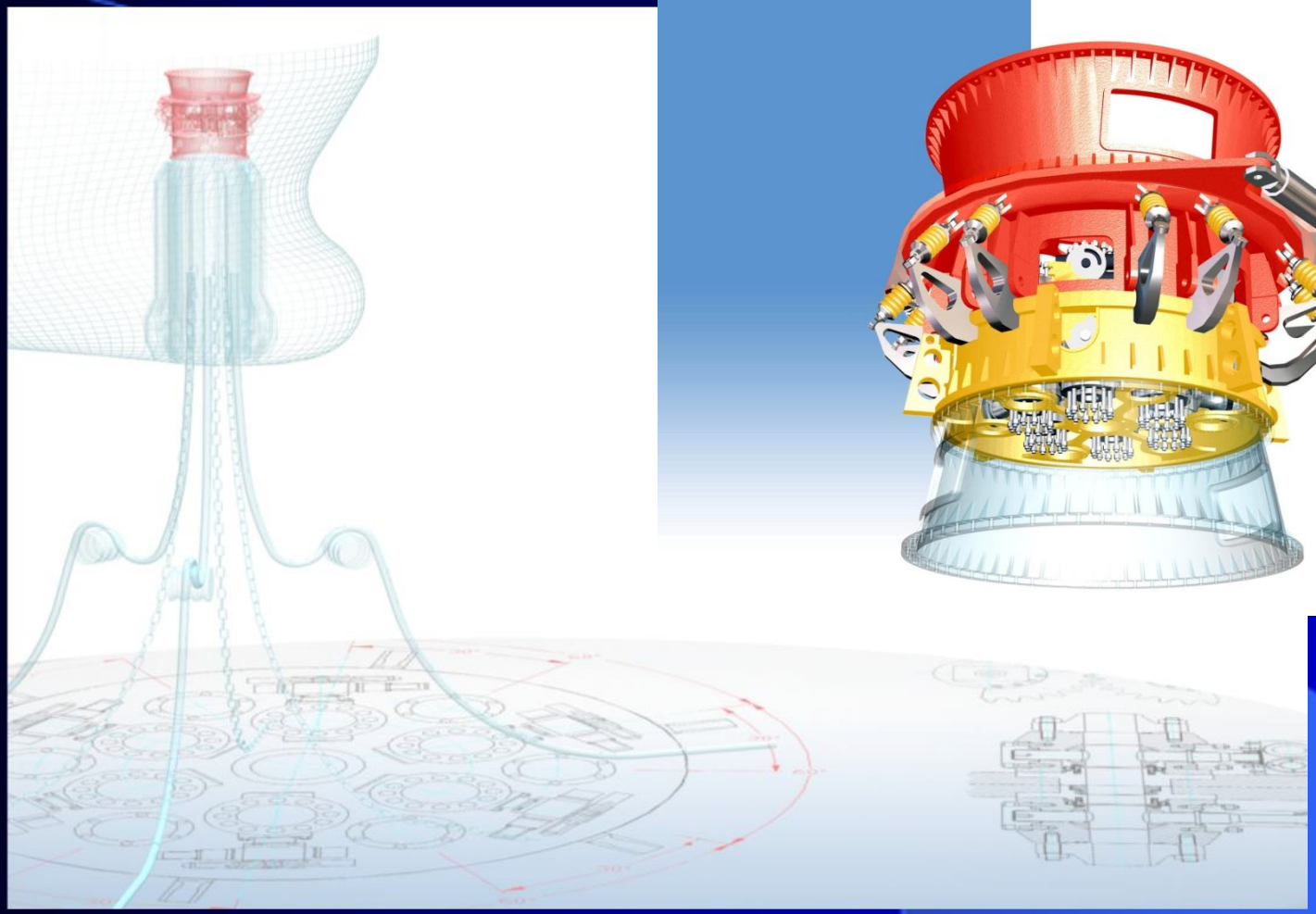

MIB MULTIBORE TURRET DISCONNECT SYSTEM AT MACONDO

MIB MULTIPATH TURRET DISCONNECTION SYSTEMS

MIB MULTIPATH TURRET DISCONNECTION SYSTEMS

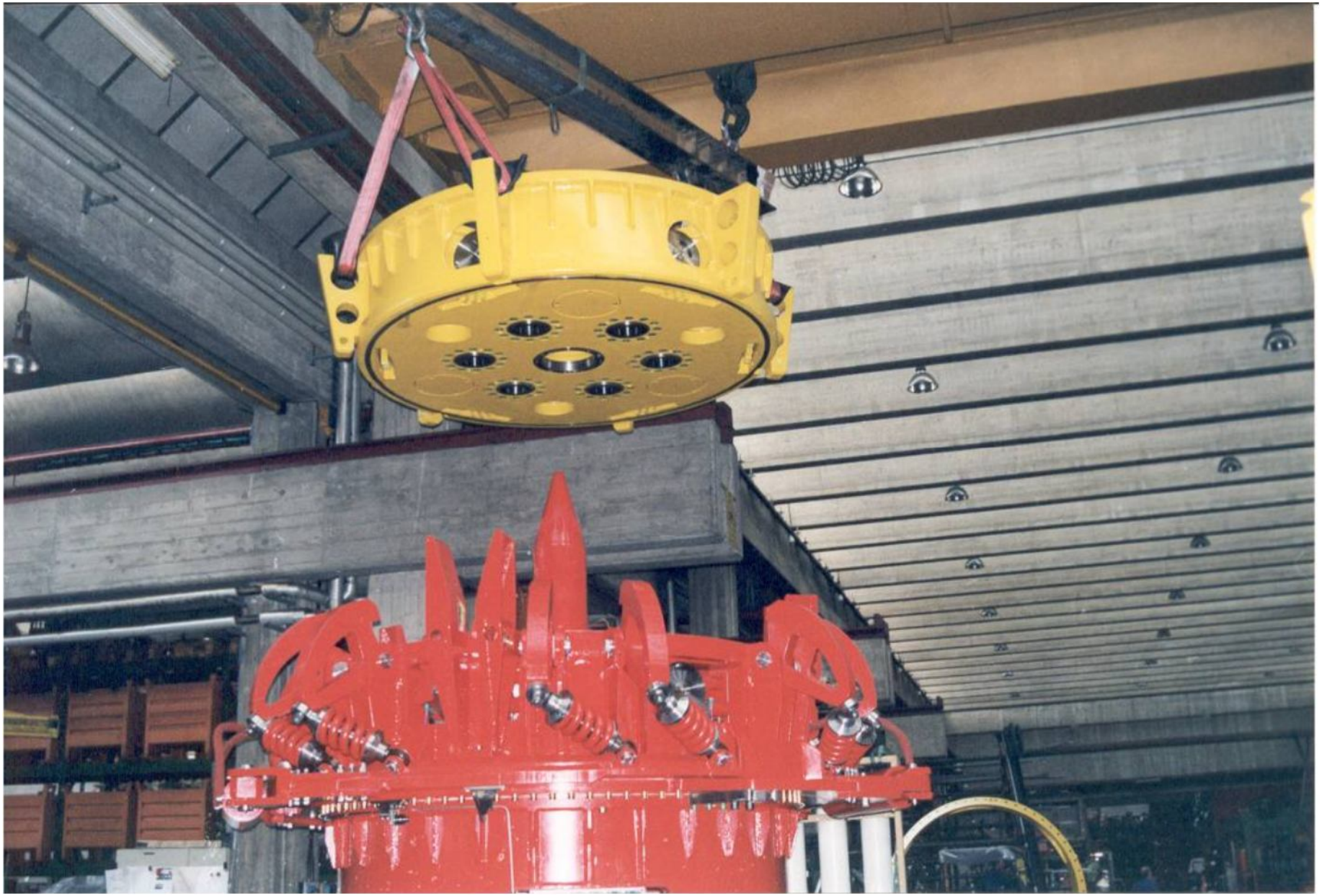

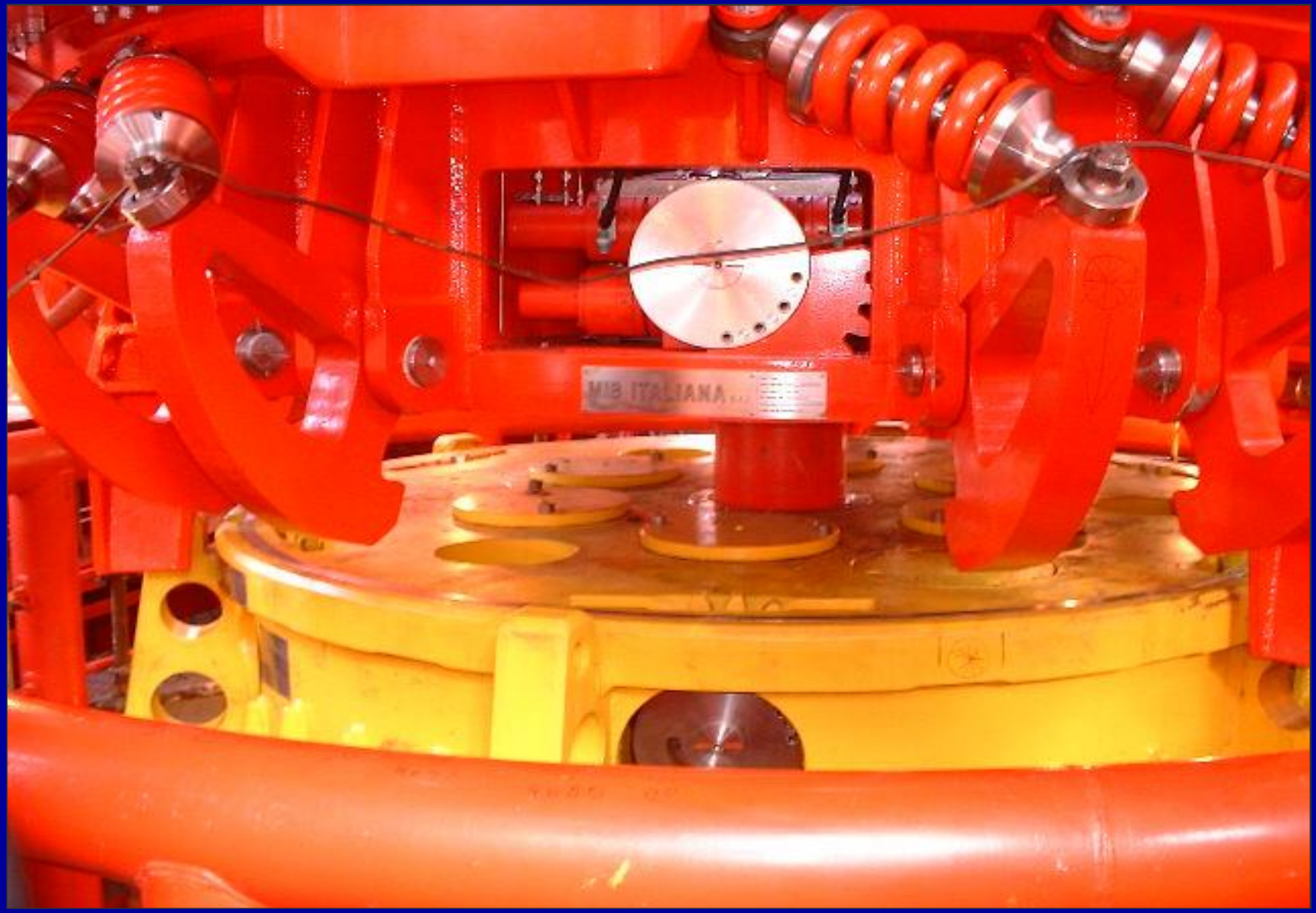

MIB OFFSHORE SOLUTIONS

MIB OFFSHORE SOLUTIONS

MIB OFFSHORE CONNECTORS & SAFETY SYSTEMS

HIGH AND LOW PRESSURE CONNECTORS AND SAFETY SYSTEMS FOR PRODUCTION RISERS, INJECTION RISERS, TRANSFER LINES, EXPORT HOSES, ETC

MIB OFFSHORE SOLUTIONS

MIB MARINE BREAKAWAYS

MIB MARINE BREAKAWAYS

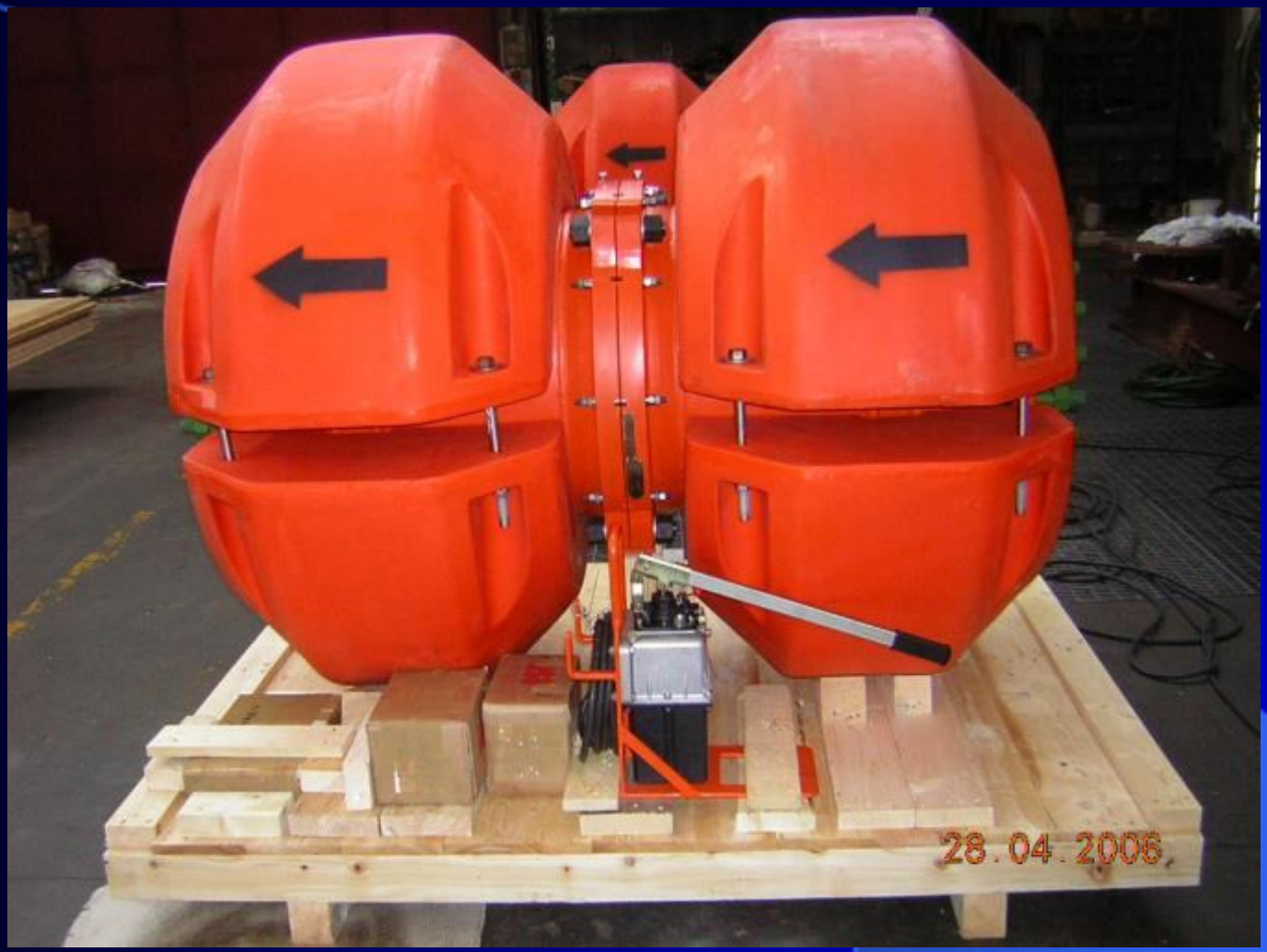

MIB MARINE BREAKAWAYS

MIBreak - PETAL VALVE TYPE

SA-A
MISC

MIB HOSE PROTECTION QCDCs

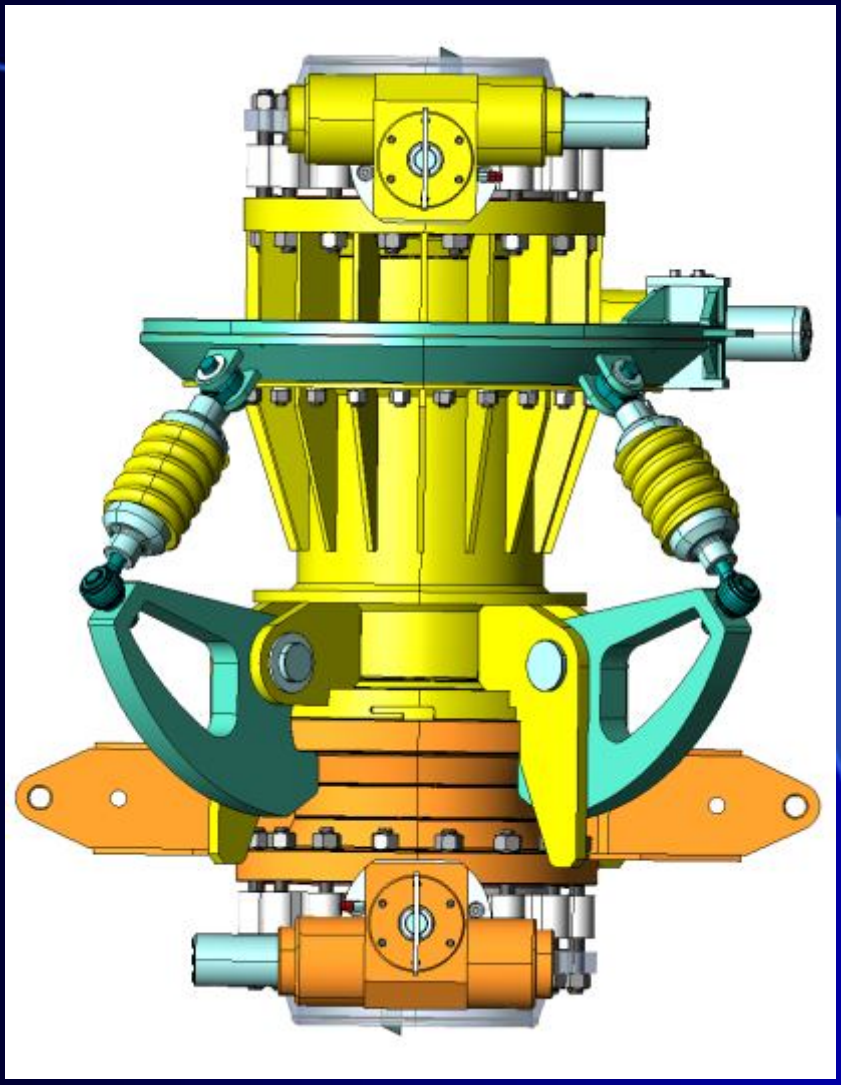

HYDRAULIC QCDC
&
DUAL BUTTERFLY VALVES

MIB CONNECTORS FOR LPG STS OPERATIONS

MIB CONNECTORS FOR LPG STS OPERATIONS

MIB CONNECTORS FOR LPG STS OPERATIONS

MIB HIGH PRESSURE FLEXIBLE RISER QCDCs

MIB HIGH PRESSURE FLEXIBLE RISER QCDCs

STS LNG System Description

MIB Ship to Ship LNG Transfer System is a complete, fully integrated and tested fluid transfer system for FPSO/FSRU/FSO units from/to any import/export vessel

MIB “STS LNG” Package comprises:

- a set of Emergency Release Systems (ERS : DBV/ERC equipment);
- a common Hydraulic Power Station and Control Desk;
- a set of Guide/Support Saddles with Integrated Braking System;
- all the required ancillaries.

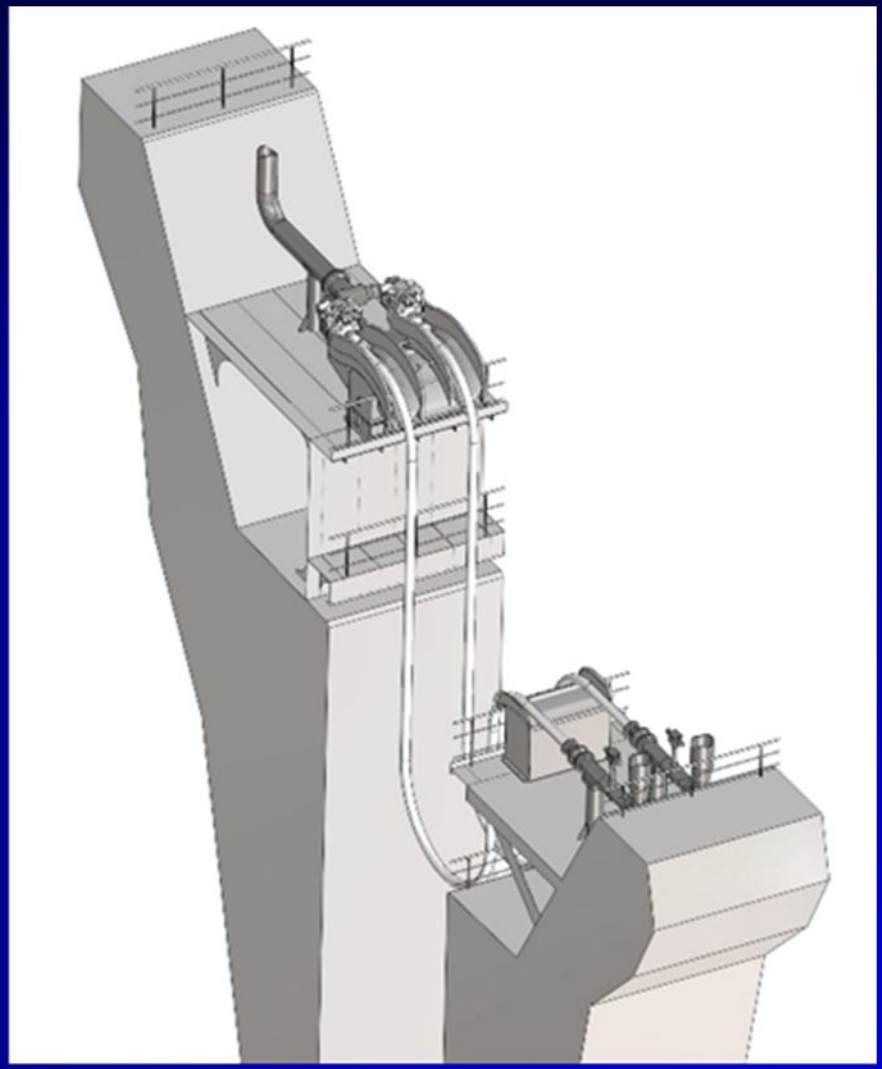

STS LNG System Description

The MIB STS LNG System is designed to be installed on the import vessel mid-ship manifold piping
It permits of isolating and then releasing the flexible hoses in the LNG transfer line under any emergency situation in a safe and reliable way

According to the effective Customer specifications MIB propose a proper solution

The core of the system is the well established MIB DBV/ERC technology
This technology guarantees close to zero leakage under any adverse marine environment

MIB Engineering capabilities

- More than 40 years of MIB experience in engineering Emergency Connector and Safety System

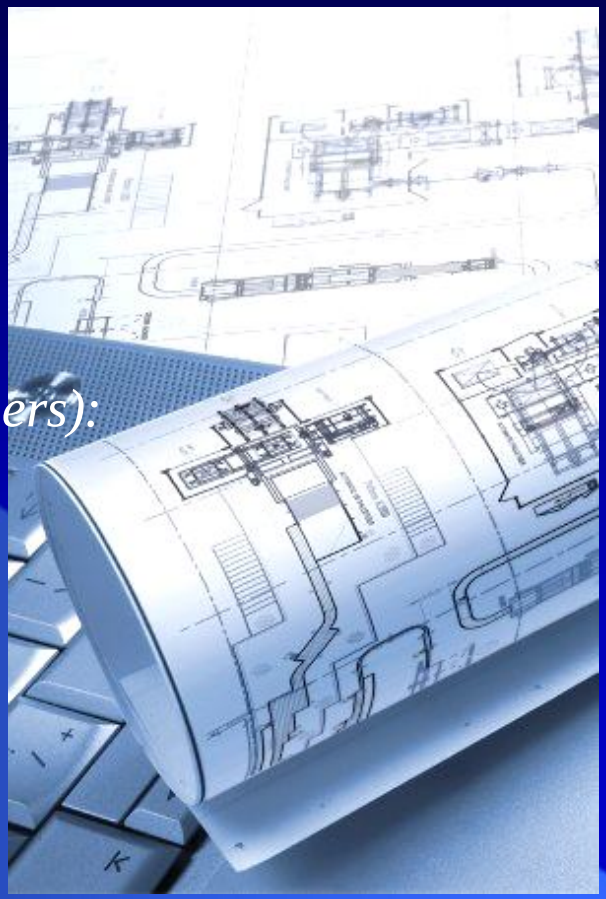

- Internal and Outsourced engineering capabilities

- Engineer Softwares used *(internally or by eng. partners):*
  - Flow master
  - Ansys
  - Nastran - Solid Works
  - Cosmos
  - Orcaflex

- Comprehensive loading systems expertise, thanks to cooperation with **Bassi Offshore srl** (hose manufacturer)